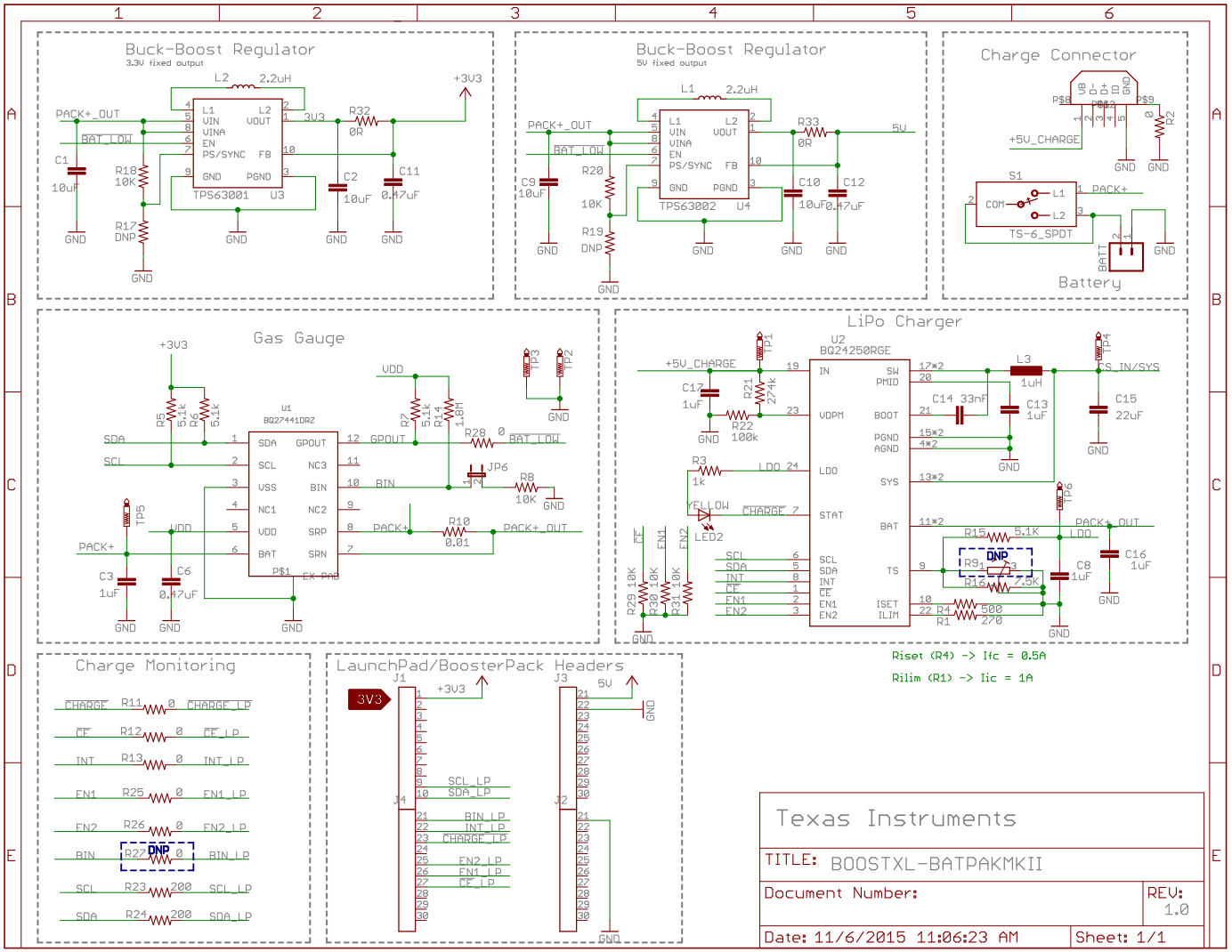
Buck-Boost Regulator
3.3V fixed output
L2 2.2uH
PACK+_OUT
BAT_LOW
L1 VIN VINA EN PS/SYNC GND
L2 VOUT FB PGND
TPS63001 U3
3V3
R32 0R
+3V3
C1 10uF
R18 10K
R17 DNP
C2 10uF
C11 0.47uF
GND
Buck-Boost Regulator
5V fixed output
L1 2.2uH
TPS63002 U4
R33 0R
5V
C9 10uF
R20 10K
R19 DNP
C10 10uF
C12 0.47uF
Charge Connector
P$8
P$9
+5V_CHARGE
R2 0
S1
COM
L1
L2
PACK+
TS-6_SPDT
BATT
Battery
Gas Gauge
+3V3
U1 BQ27441DRZ
SDA
SCL
VSS
NC1
VDD
BAT
GPOUT
NC3
BIN
NC2
SRP
SRN
EX_PAD
R5 5.1k
R6 5.1k
R7 5.1k
R14 1.8M
R28 0
BAT_LOW
JP6
R8 10K
R10 0.01
PACK+_OUT
TP3
TP2
TP5
C3 1uF
C6 0.47uF
LiPo Charger
U2 BQ24250RGE
+5V_CHARGE
TP1
C17 1uF
R21 274k
R22 100k
IN
VDPM
LDO
STAT
SCL
SDA
INT
CE
EN1
EN2
SW
PMID
BOOT
PGND
AGND
SYS
BAT
TS
ISET
ILIM
L3 1uH
C14 33nF
C13 1uF
TP4
CS_IN/SYS
C15 22uF
TP6
PACK+_OUT
LDO
R15 5.1K
R9 DNP
R16 75K
C8 1uF
C16 1uF
R1 500
R1 270
R3 1k
YELLOW
CHARGE
LED2
R29 10K
R30 10K
R31 10K
Riset (R4) -> Iic = 0.5A
Rilim (R1) -> Iic = 1A
Charge Monitoring
CHARGE R11 0 CHARGE_LP
CE R12 0 CE_LP
INT R13 0 INT_LP
EN1 R25 0 EN1_LP
EN2 R26 0 EN2_LP
BIN R27 DNP 0 BIN_LP
SCL R23 200 SCL_LP
SDA R24 200 SDA_LP
LaunchPad/BoosterPack Headers
J1
J4
J3
J2
3V3
+3V3
5V
SCL_LP
SDA_LP
BIN_LP
INT_LP
CHARGE_LP
EN2_LP
EN1_LP
CE_LP
Texas Instruments
TITLE: BOOSTXL-BATPAKMKII
Document Number:
REV: 1.0
Date: 11/6/2015 11:06:23 AM
Sheet: 1/1